25 W / 75 RPM, 3-phase 230 V

Article no. F 22025075

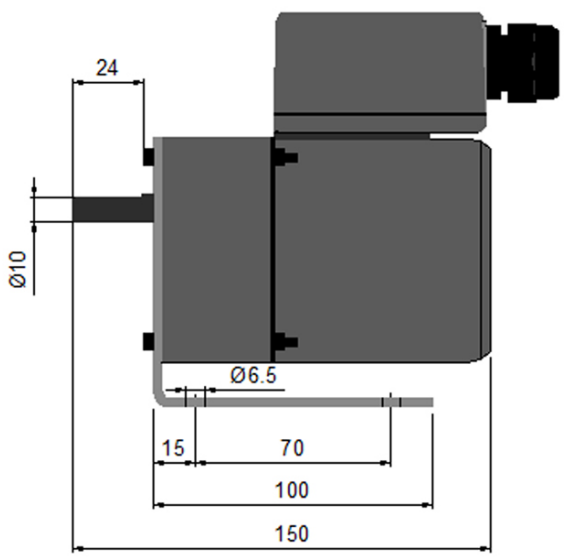

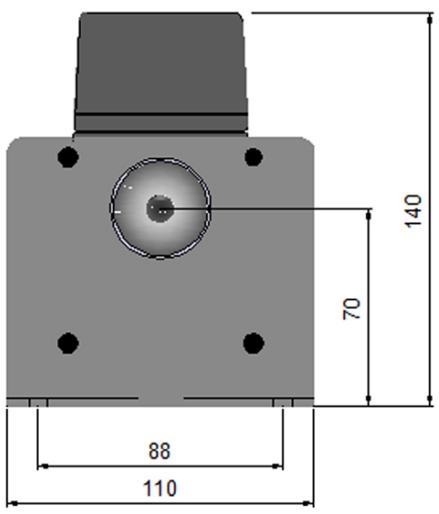

Technical data for 50 Hz, VVX-motor	25/75
Rated output	25 W
Rated current	0,28 A
Rated speed (RPM)	75 rpm
Gear ratio	1:18
Rated torque	2,5 Nm
Enclosure class	IP54
Connection voltage	3x230 V
Weight incl. motor bracket	2,7 kg
Max rotor diameter at rotor speed 12 RPM	800 mm

To desktop version